Product data sheet

Version 11/2022

Smart Box

Energy management
Installation set for DIN rail

Versions

Description	Item No.
Smart Box 3 phase; cloud based	00010196

Supply voltage	230 V AC, Integrated power supply from the voltage measurement path
Consumption	approx. 3,7 W
Current range	0-100 A; 1-3 phase (contactless with current transformer)
Clamp diameter	13 mm
Precision	2% (when using the foldable current transformers included in the scope of delivery)
Measured variables	Current, voltage, current direction, active/reactive/apparent power, fault currents, Load on the neutral conductor, phase shift, frequency
Ambient temperature	-0..+50°C, 5.. 90 % rH non-condensing
Pollution level 2	
Protection class	IP20
Interface	LAN
Output interpreter	eLMS
Housing (W/H/D)	107 x 90 x 48 mm
Division units	6DU
Packaging	Carton / 1 Piece
Dimensions L/W/H	294 / 183 / 85 mm
Shipment weight	0,95 kg

Smart Box

Application examples

The Smart Box is used for dynamic load measurement or PV surplus detection in an intelligent energy management of individual charging points or a charging group.
After integration into the electrify charging management system (eLMS), the Smart Box can be configured for a wide range of scenarios.

Dynamic load measurement

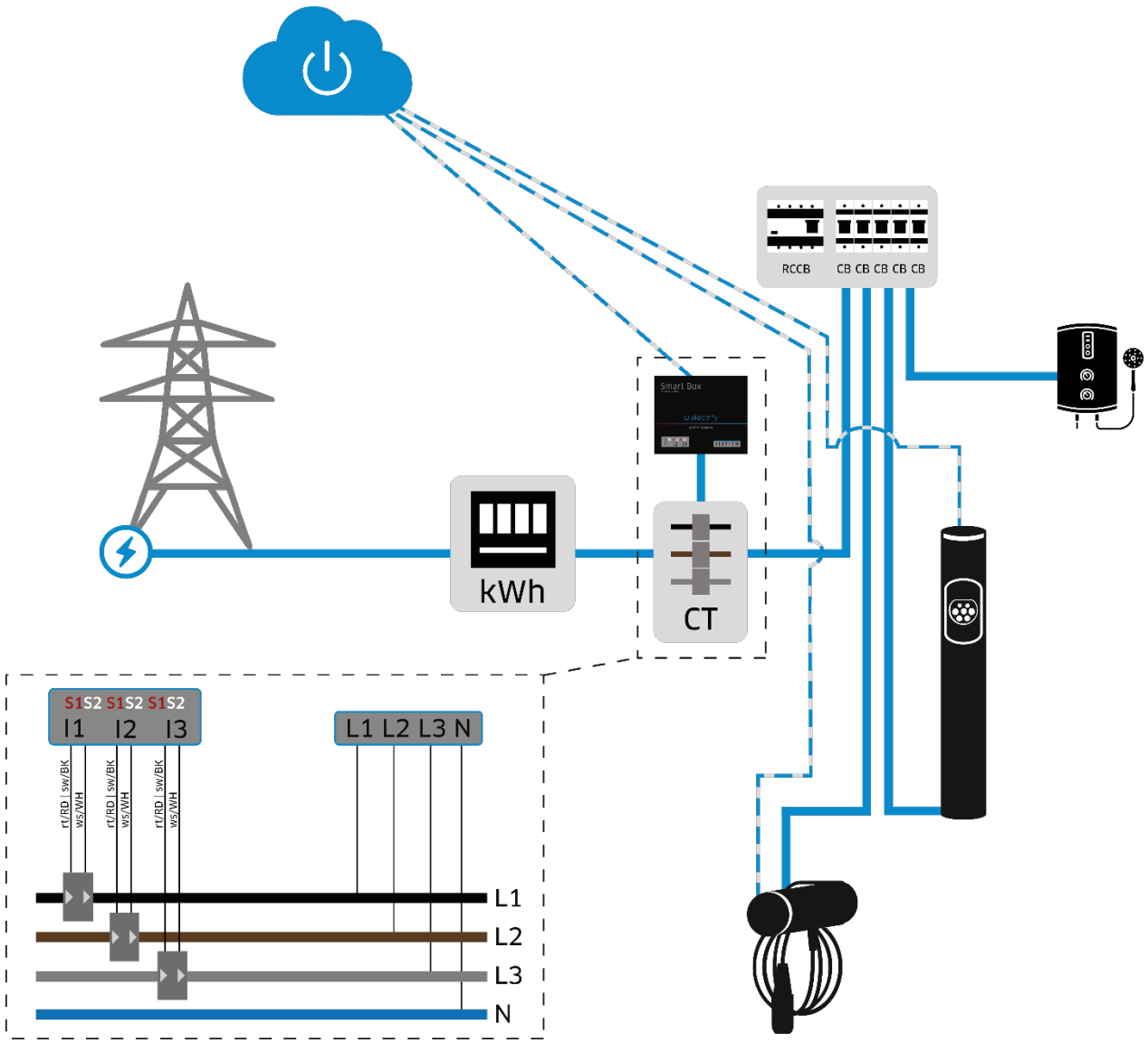

PV surplus

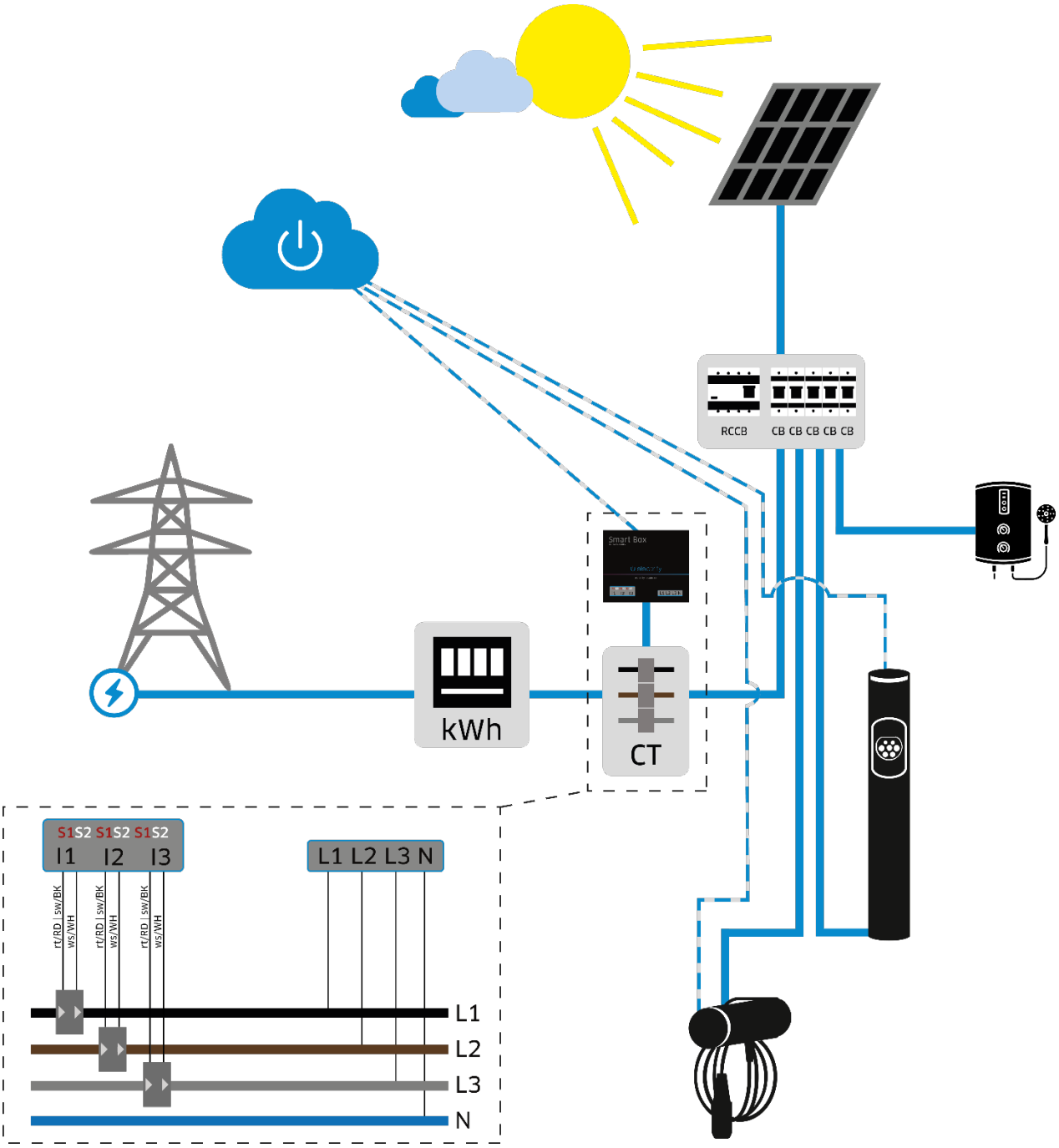
RCCB
CB CB CB CB CB
Smart Box
kWh
CT
S1S2 S1S2 S1S2
I1 I2 I3
L1 L2 L3 N
rt/RD | sw/BK
ws/WH
L1
L2
L3
N

External consumer

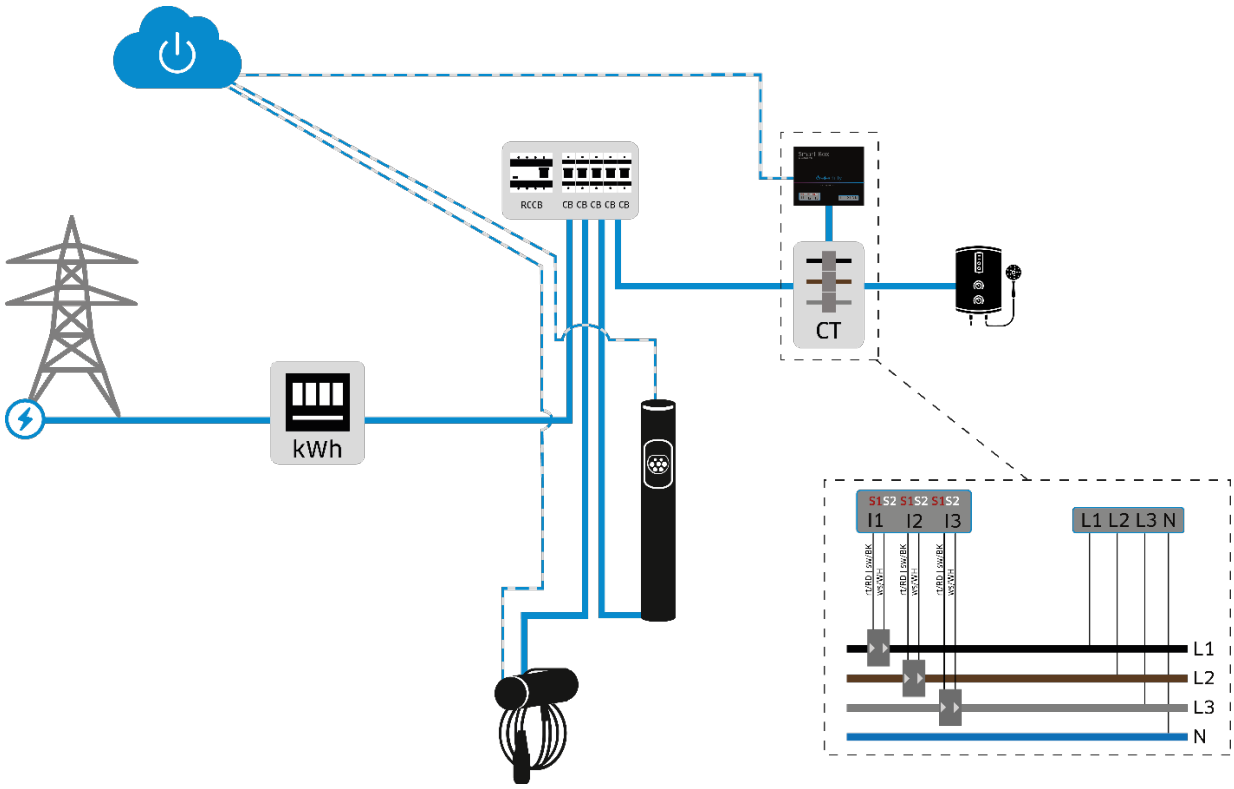

hesotec electrify gmbh

Rubbertskath 34
D 46539 Dinslaken

Tel.: +49(0)2064 60105 60
E-Mail: electrify@hesotec.de

electrify.hesotec.de

Erros and changes exepted

©2022 hesotec electrify gmbh